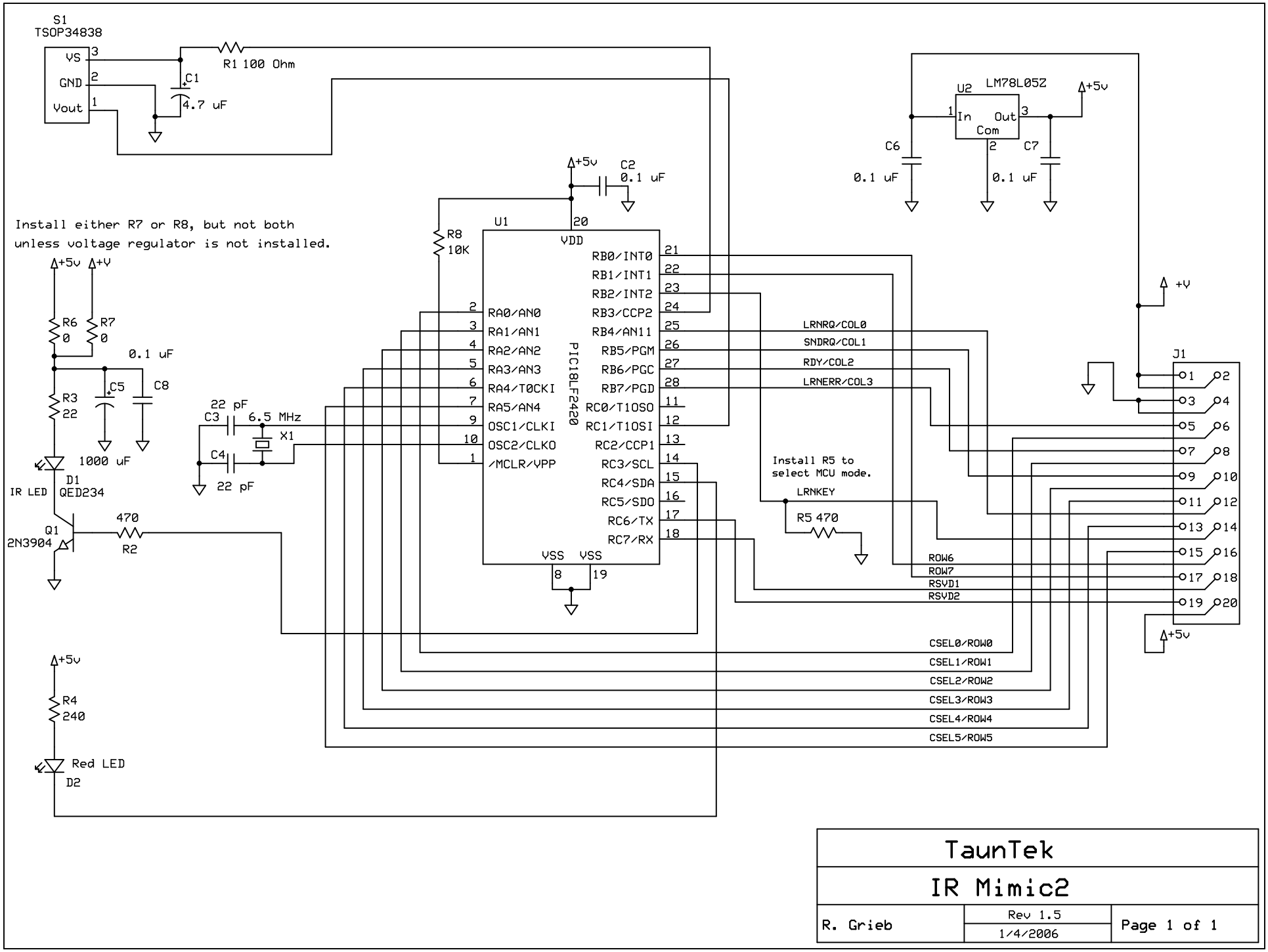

TaunTek		
IR Mimic2		
R. Grieb	Rev 1.5 1/4/2006	Page 1 of 1