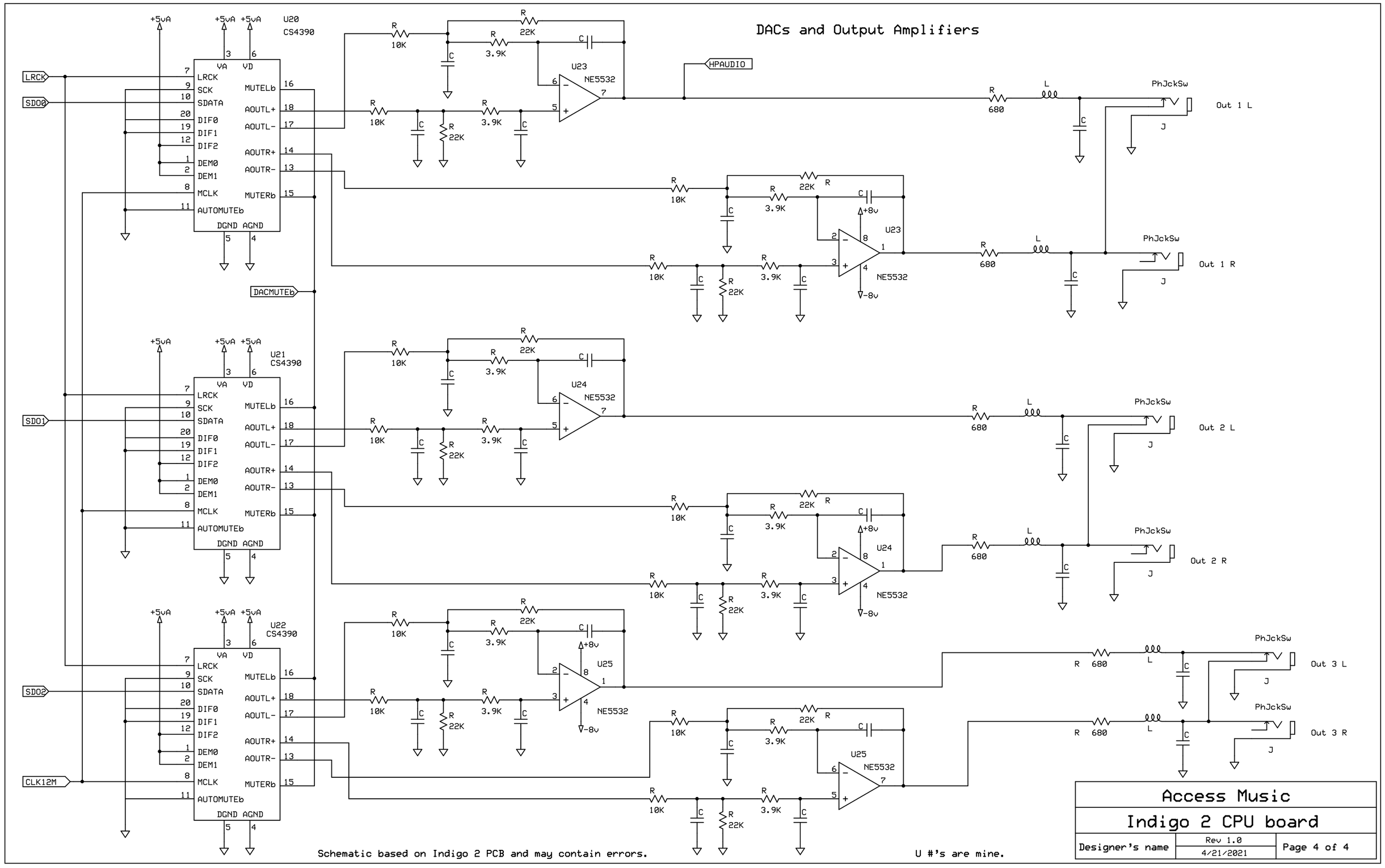
DACs and Output Amplifiers
U20
CS4390
U21
CS4390
U22
CS4390
U23
NE5532
U24
NE5532
U25
NE5532
+5vA
LRCK
SDO0
SDO1
SDO2
CLK12M
DACMUTEb
HPAUDIO
VA
VD
LRCK
SCK
SDATA
DIF0
DIF1
DIF2
DEM0
DEM1
MCLK
AUTOMUTEb
DGND
AGND
MUTELb
AOUTL+
AOUTL-
AOUTR+
AOUTR-
MUTERb
R
10K
3.9K
22K
C
680
L
PhJckSw
J
Out 1 L
Out 1 R
Out 2 L
Out 2 R
Out 3 L
Out 3 R
+8v
-8v
Schematic based on Indigo 2 PCB and may contain errors.
U #'s are mine.
Access Music
Indigo 2 CPU board
Designer's name
Rev 1.0
4/21/2021
Page 4 of 4