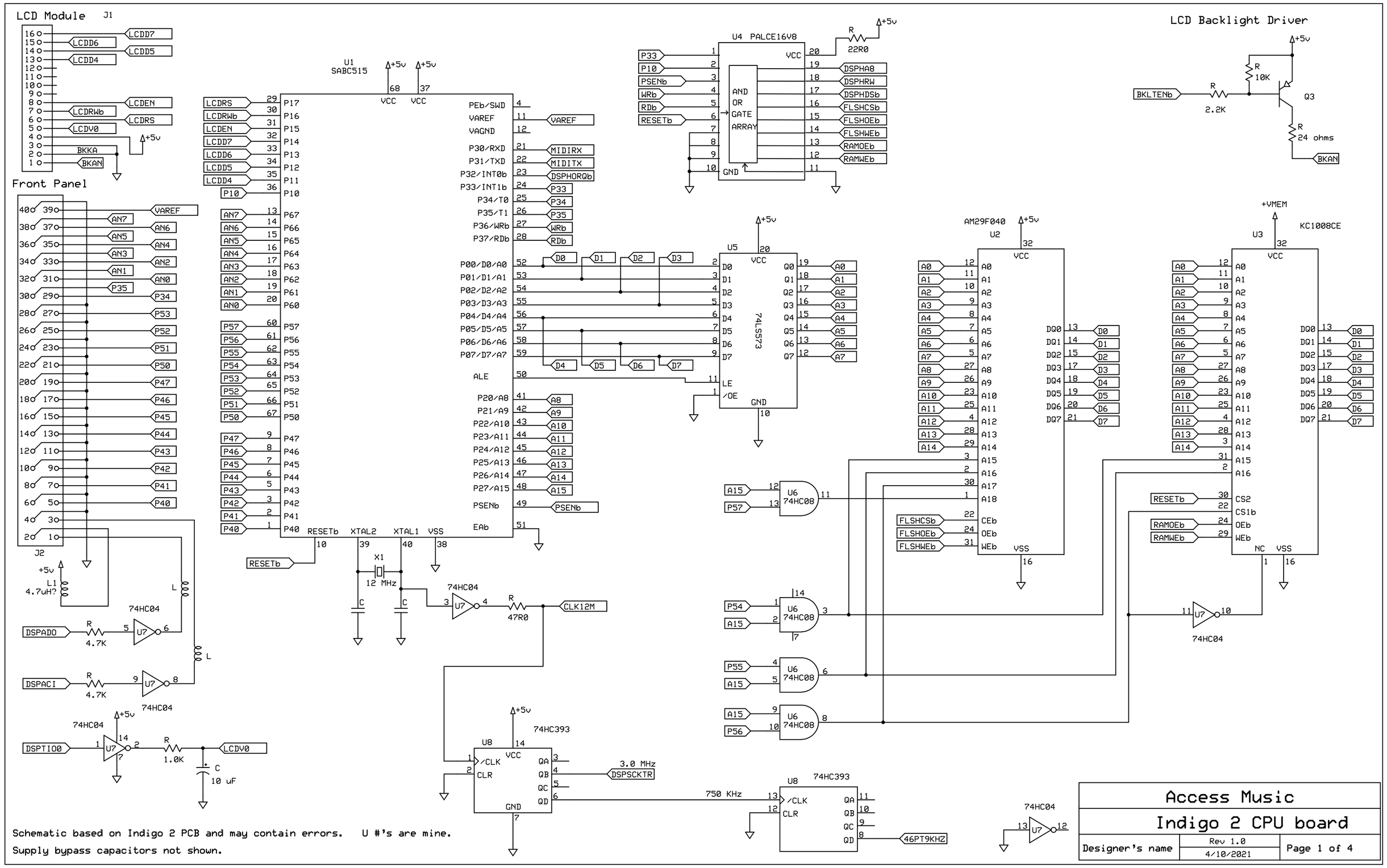
LCD Module
J1
LCD Backlight Driver
Front Panel
J2
U1
SABC515
U4 PALCE16V8
AND OR GATE ARRAY
U5
74LS573
U2
AM29F040
U3
KC1008CE
U6
74HC08
U7
74HC04
U8
74HC393
X1
12 MHz
L1
4.7uH?
Q3
2.2K
10K
24 ohms
22R0
47R0
4.7K
1.0K
10 uF
3.0 MHz
750 KHz
46PT9KHZ
CLK12M
DSPSCKTR
MIDIRX
MIDITX
DSPHORQb
DSPHA8
DSPHRW
DSPHDSb
FLSHCSb
FLSHOEb
FLSHWEb
RAMOEb
RAMWEb
BKLTENb
BKAN
BKKA
LCDV0
DSPADO
DSPACI
DSPTIO0
VAREF
+VMEM
Schematic based on Indigo 2 PCB and may contain errors. U #'s are mine.
Supply bypass capacitors not shown.
Access Music
Indigo 2 CPU board
Designer's name
Rev 1.0
4/10/2021
Page 1 of 4