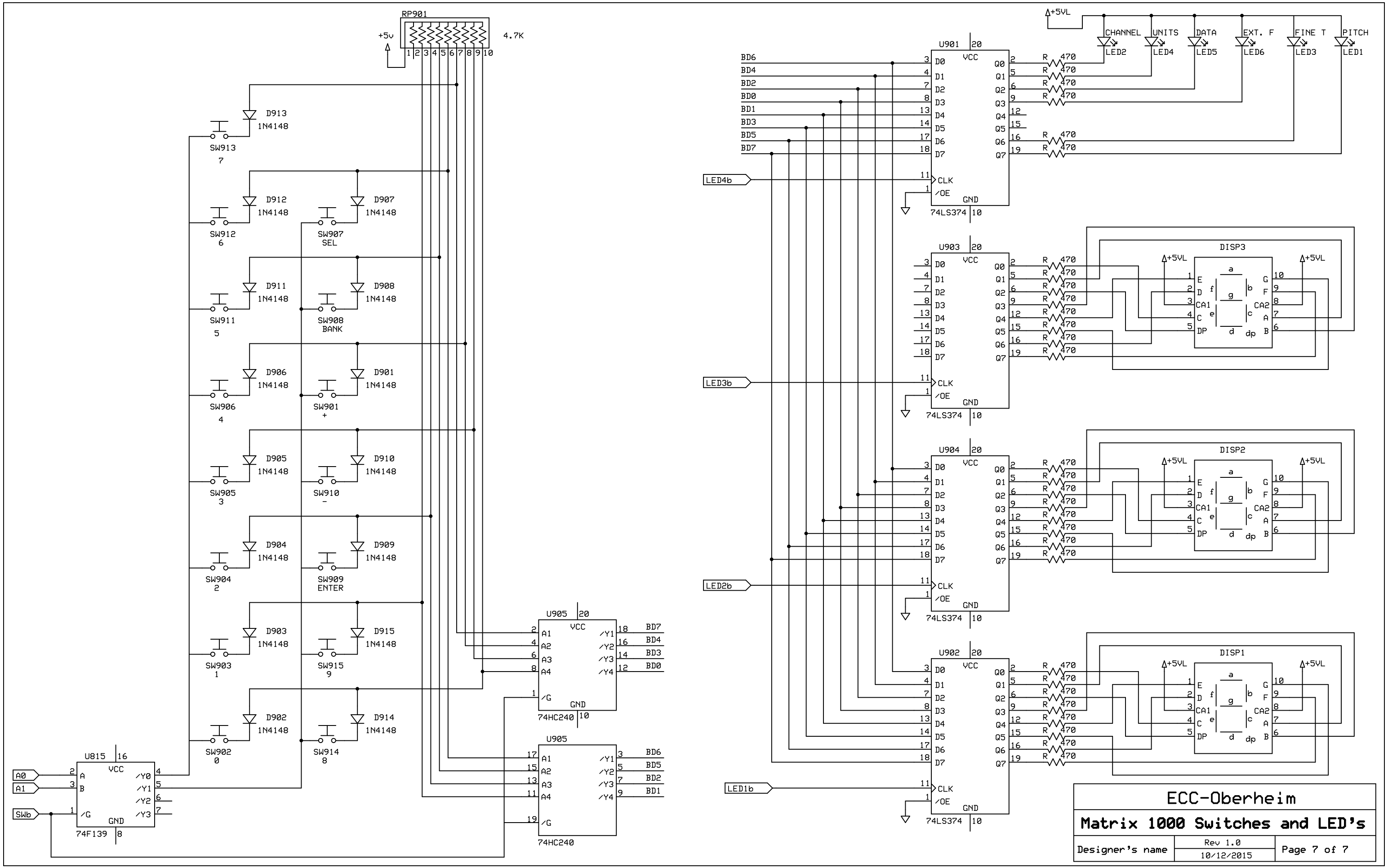
RP901
+5v
4.7K
D913 1N4148
SW913 7
D912 1N4148
SW912 6
D907 1N4148
SW907 SEL
D911 1N4148
SW911 5
D908 1N4148
SW908 BANK
D906 1N4148
SW906 4
D901 1N4148
SW901 +
D905 1N4148
SW905 3
D910 1N4148
SW910 -
D904 1N4148
SW904 2
D909 1N4148
SW909 ENTER
D903 1N4148
SW903 1
D915 1N4148
SW915 9
D902 1N4148
SW902 0
D914 1N4148
SW914 8
U815 16
VCC
A0
A1
SWb
A
B
/G
/Y0
/Y1
/Y2
/Y3
GND
74F139 8
U905 20
VCC
A1
A2
A3
A4
/G
/Y1
/Y2
/Y3
/Y4
GND
74HC240 10
BD7
BD4
BD3
BD0
U905
A1
A2
A3
A4
/G
/Y1
/Y2
/Y3
/Y4
74HC240
BD6
BD5
BD2
BD1
+5VL
CHANNEL LED2
UNITS LED4
DATA LED5
EXT. F LED6
FINE T LED3
PITCH LED1
U901 20
VCC
BD6
BD4
BD2
BD0
BD1
BD3
BD5
BD7
D0 D1 D2 D3 D4 D5 D6 D7
Q0 Q1 Q2 Q3 Q4 Q5 Q6 Q7
LED4b
CLK
/OE
GND
74LS374 10
R 470
U903 20
VCC
LED3b
CLK
/OE
GND
74LS374 10
DISP3
E D CA1 C DP
a b c d e f g dp
G F CA2 A B
U904 20
VCC
LED2b
CLK
/OE
GND
74LS374 10
DISP2
U902 20
VCC
LED1b
CLK
/OE
GND
74LS374 10
DISP1
ECC-Oberheim
Matrix 1000 Switches and LED's
Designer's name
Rev 1.0
10/12/2015
Page 7 of 7