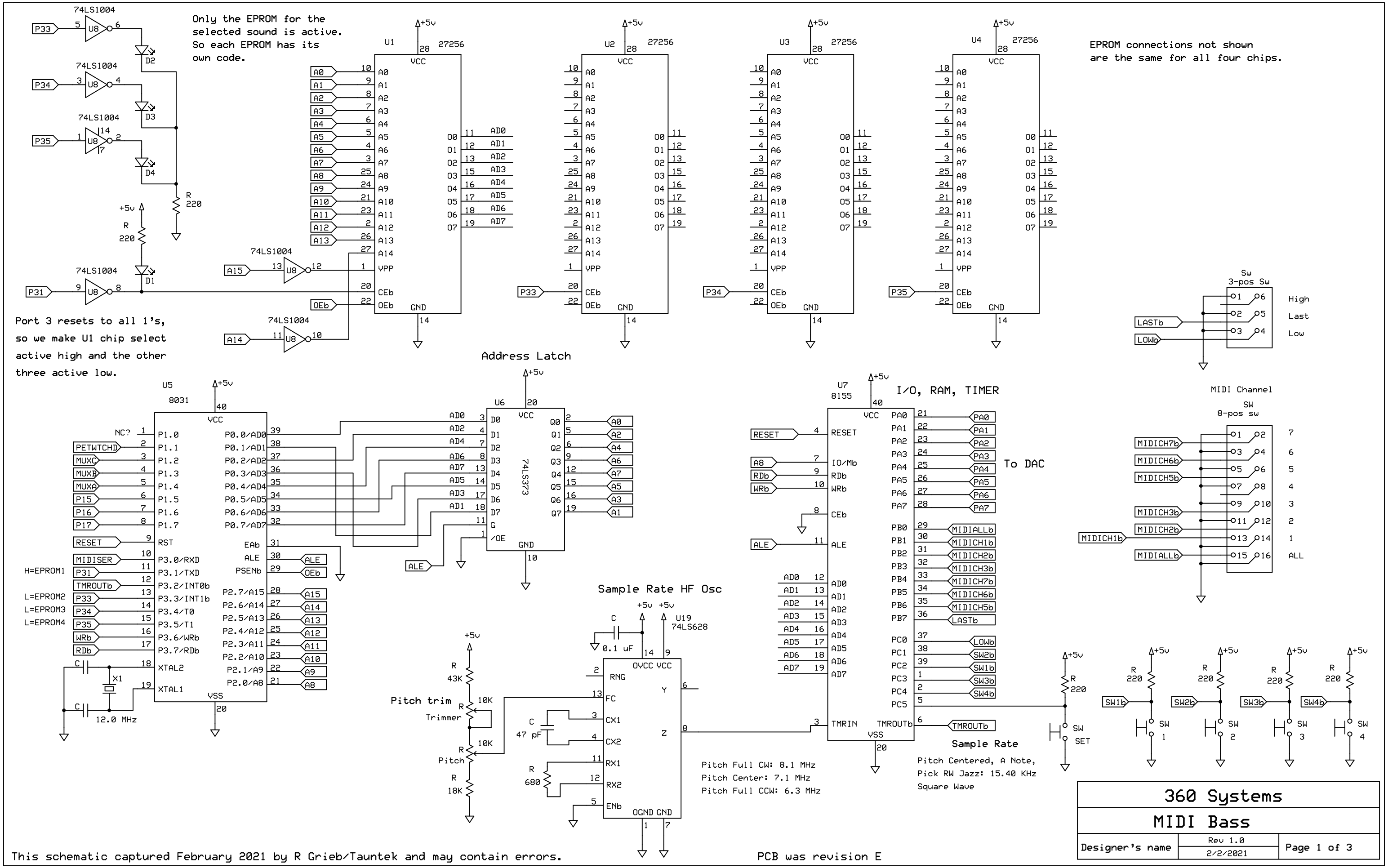
Only the EPROM for the selected sound is active. So each EPROM has its own code.
EPROM connections not shown are the same for all four chips.
Port 3 resets to all 1's, so we make U1 chip select active high and the other three active low.
74LS1004
27256
8031
74LS373
8155
74LS628
Address Latch
I/O, RAM, TIMER
Sample Rate HF Osc
Pitch trim
Trimmer
Pitch
To DAC
Sample Rate
Pitch Centered, A Note, Pick RW Jazz: 15.40 KHz Square Wave
Pitch Full CW: 8.1 MHz
Pitch Center: 7.1 MHz
Pitch Full CCW: 6.3 MHz
12.0 MHz
MIDI Channel
H=EPROM1
L=EPROM2
L=EPROM3
L=EPROM4
High
Last
Low
ALL
360 Systems
MIDI Bass
Designer's name
Rev 1.0
2/2/2021
Page 1 of 3
This schematic captured February 2021 by R Grieb/Tauntek and may contain errors.
PCB was revision E