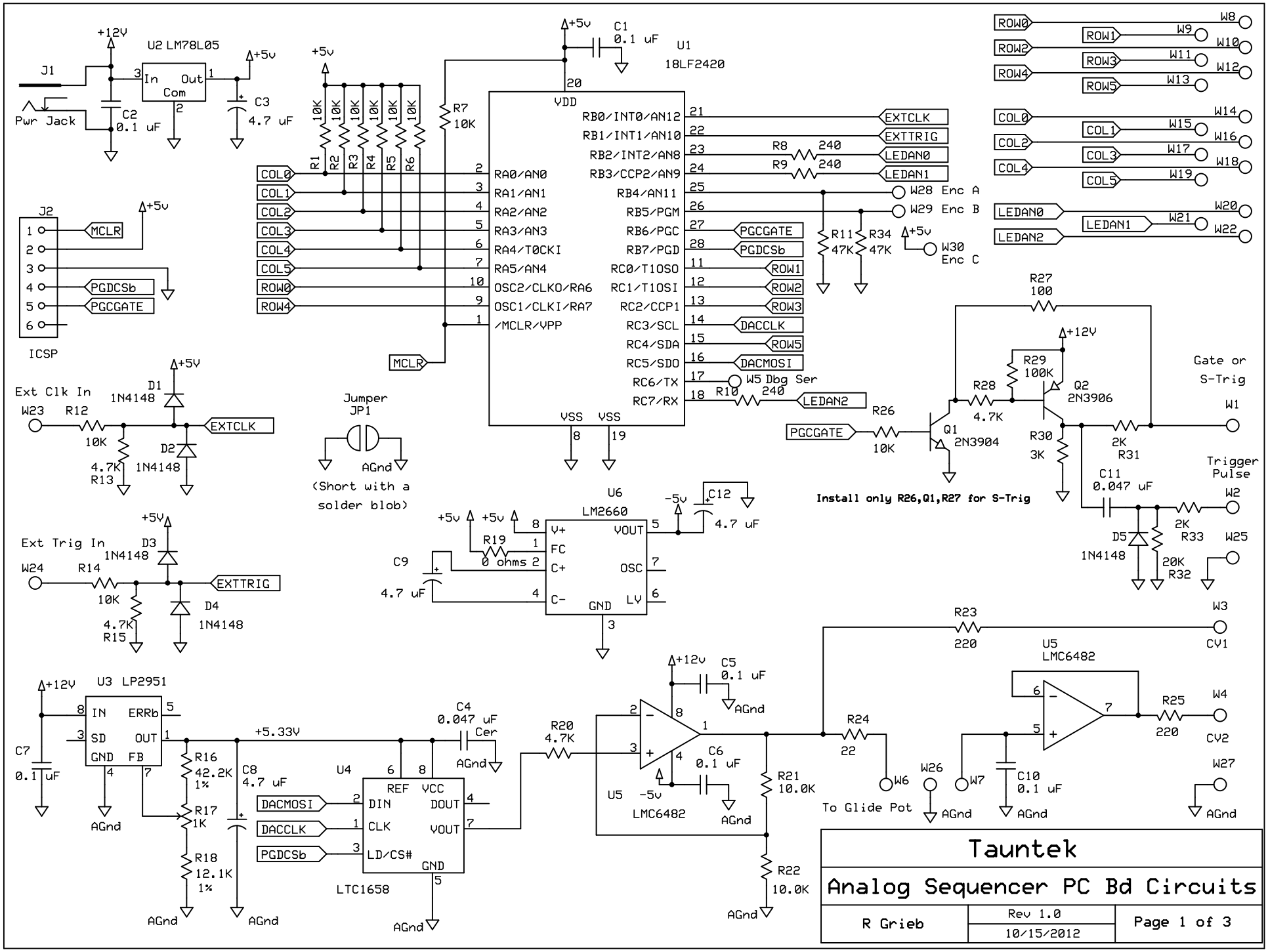

Tauntek

Analog Sequencer PC Bd Circuits

R Grieb	Rev 1.0 10/15/2012	Page 1 of 3