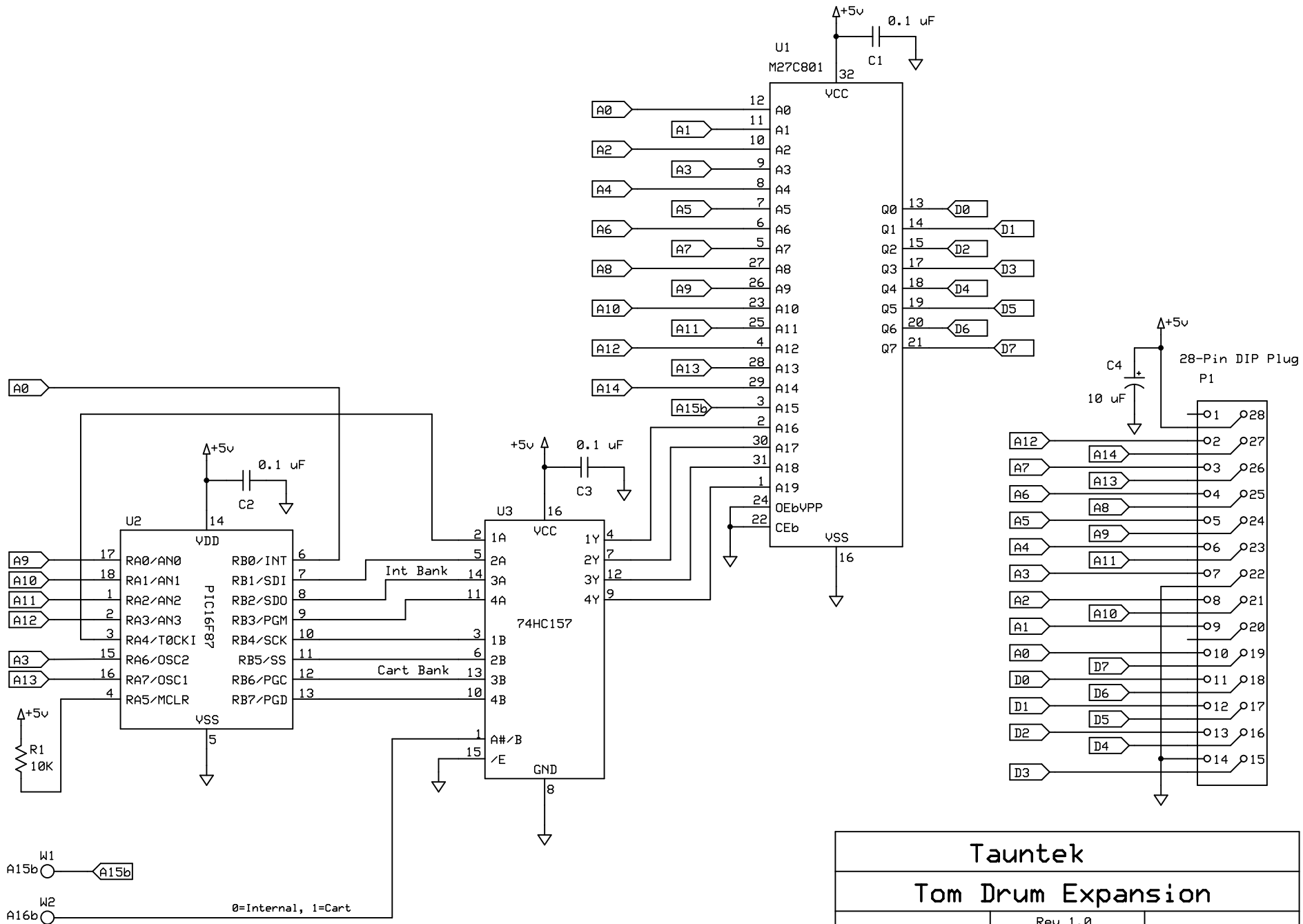
U1
M27C801
+5v
0.1 uF
C1
VCC
VSS
A0
A1
A2
A3
A4
A5
A6
A7
A8
A9
A10
A11
A12
A13
A14
A15b
OEbVPP
CEb
Q0
Q1
Q2
Q3
Q4
Q5
Q6
Q7
D0
D1
D2
D3
D4
D5
D6
D7
C4
10 uF
28-Pin DIP Plug
P1
U2
PIC16F87
VDD
VSS
RA0/AN0
RA1/AN1
RA2/AN2
RA3/AN3
RA4/T0CKI
RA6/OSC2
RA7/OSC1
RA5/MCLR
RB0/INT
RB1/SDI
RB2/SDO
RB3/PGM
RB4/SCK
RB5/SS
RB6/PGC
RB7/PGD
C2
R1
10K
U3
74HC157
C3
1A
2A
3A
4A
1B
2B
3B
4B
A#/B
/E
1Y
2Y
3Y
4Y
GND
Int Bank
Cart Bank
W1
W2
A15b
A16b
0=Internal, 1=Cart
Tauntek
Tom Drum Expansion
R. Grieb
Rev 1.0
4/10/2016
Page 1 of 1