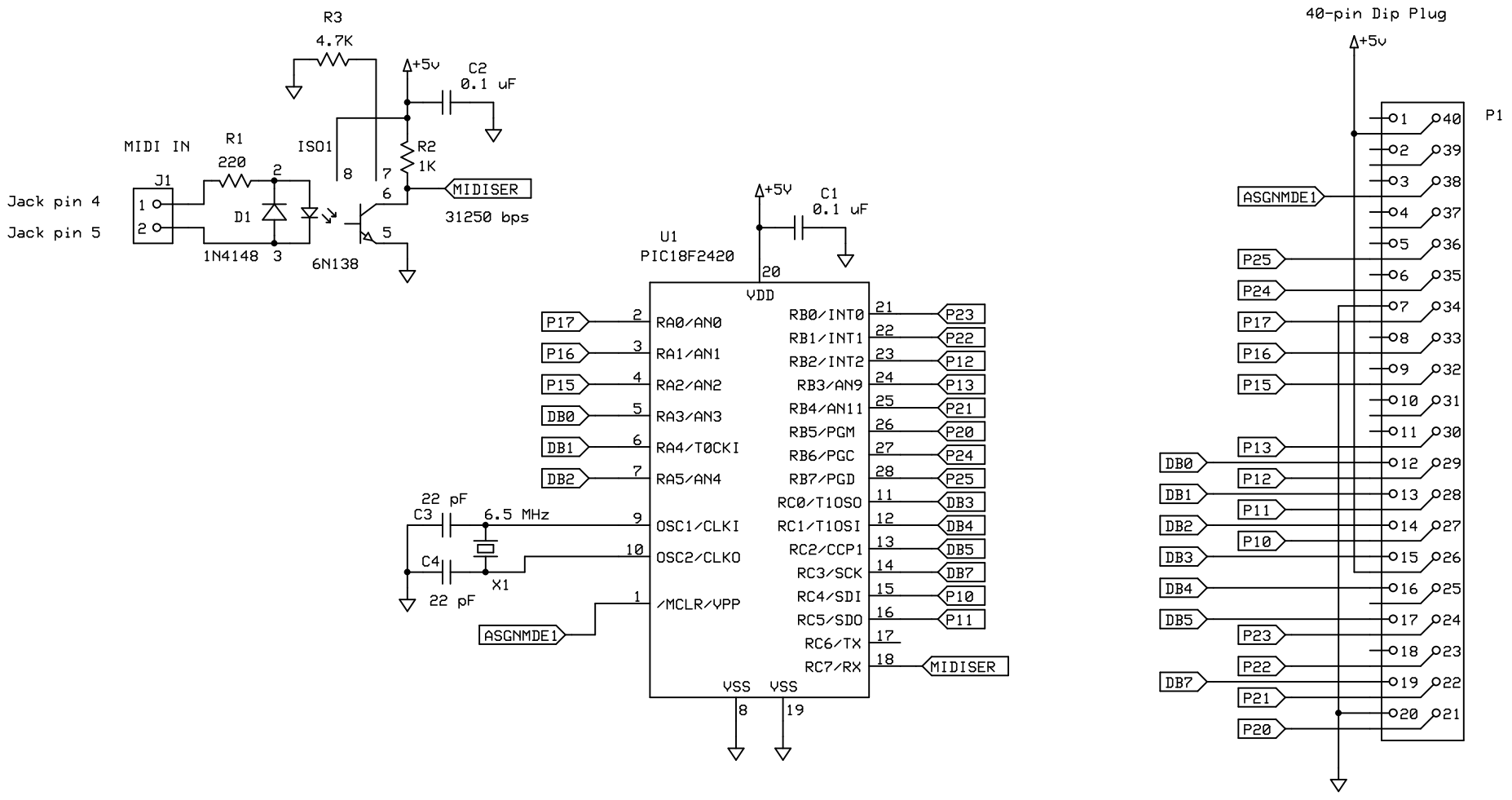

8048 current-matching resistors:

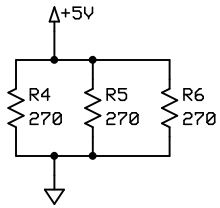

Tauntek		
Trident MIDI Key Assigner		
R Grieb	Rev 1.0 6/23/2018	Page 1 of 1