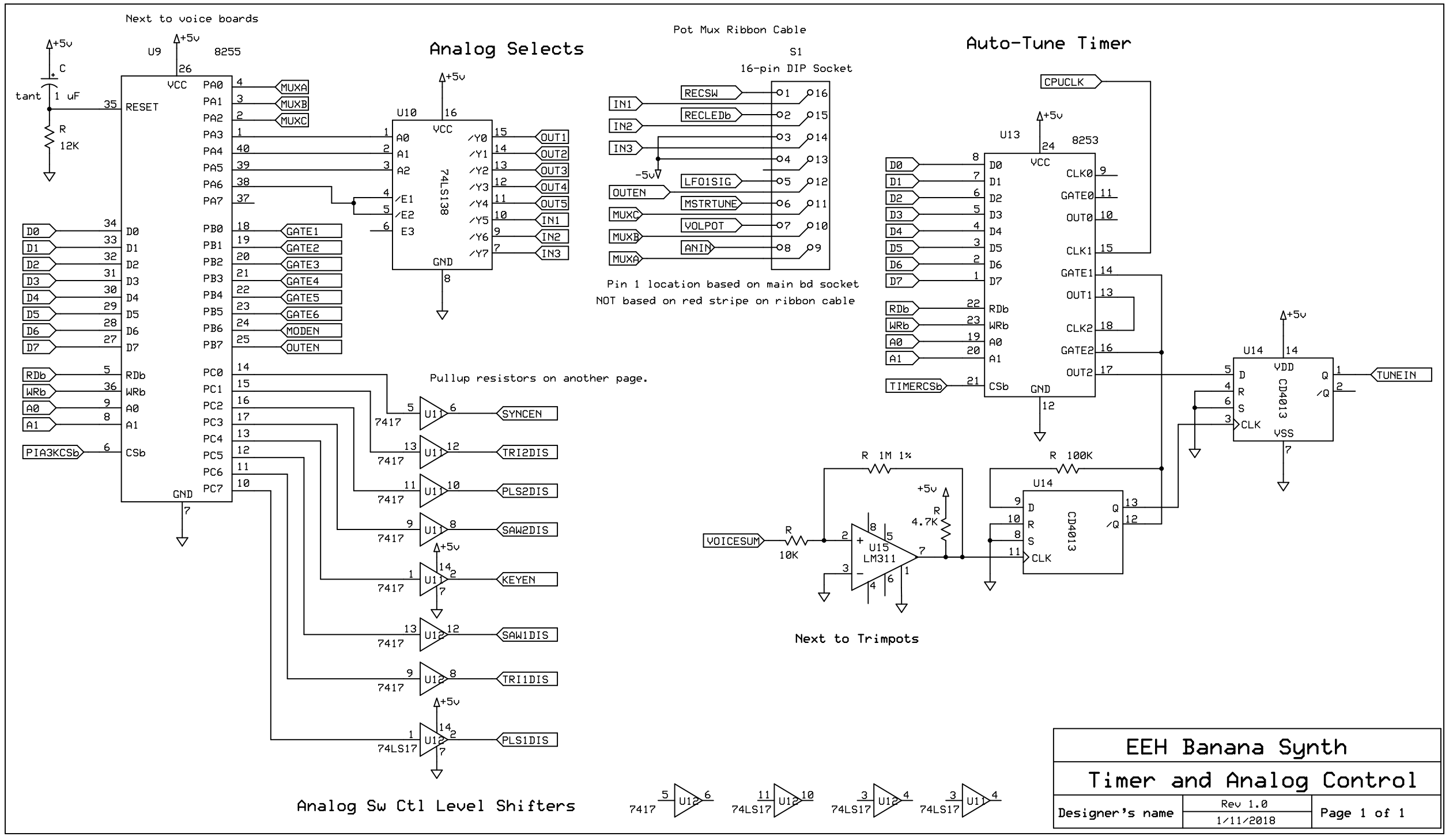

EEH Banana Synth		
Timer and Analog Control		
Designer's name	Rev 1.0 1/11/2018	Page 1 of 1