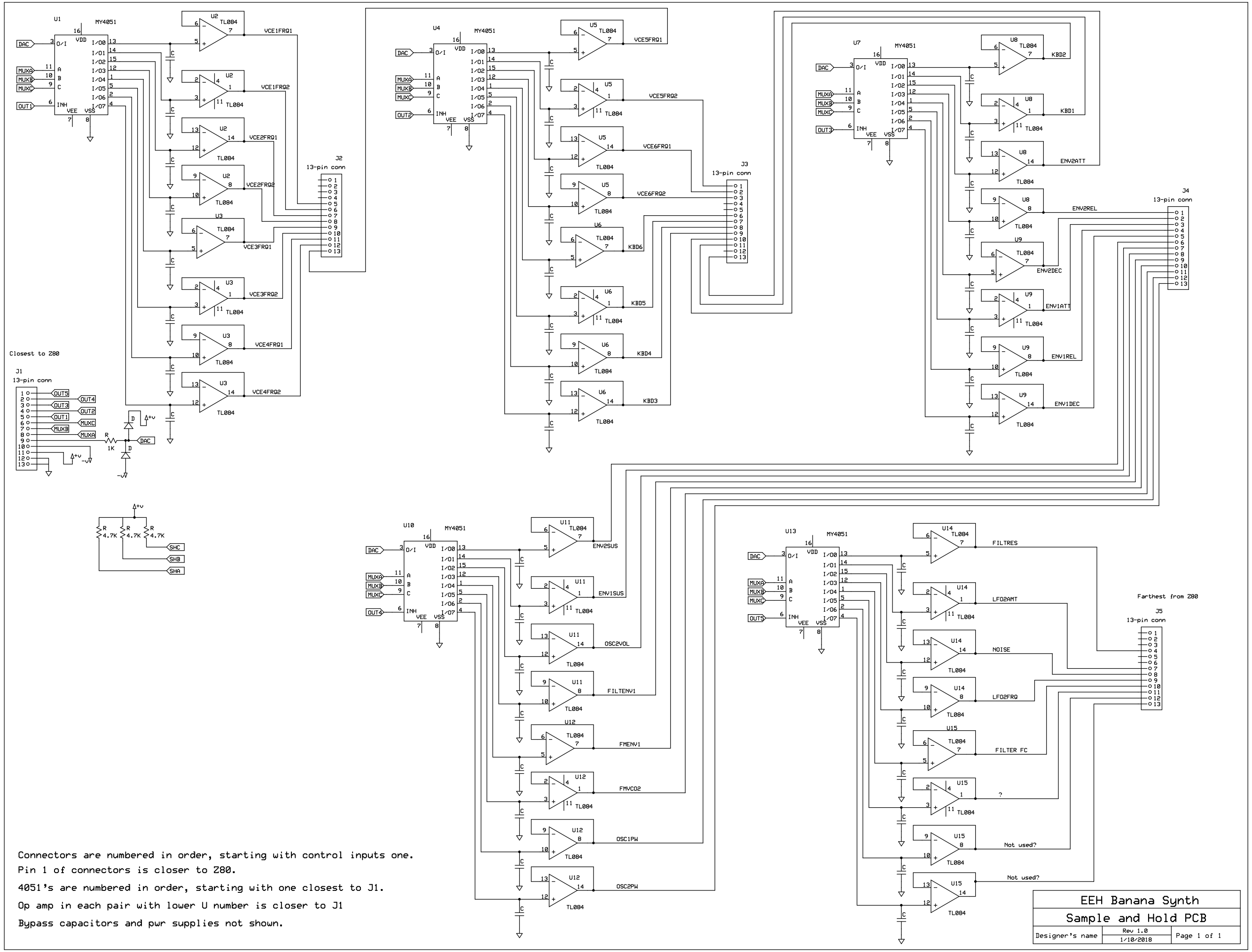

Connectors are numbered in order, starting with control inputs one.
Pin 1 of connectors is closer to Z80.
4051's are numbered in order, starting with one closest to J1.
Op amp in each pair with lower U number is closer to J1
Bypass capacitors and pwr supplies not shown.

EEH Banana Synth		
Sample and Hold PCB		
Designer's name	Rev 1.0 1/10/2018	Page 1 of 1