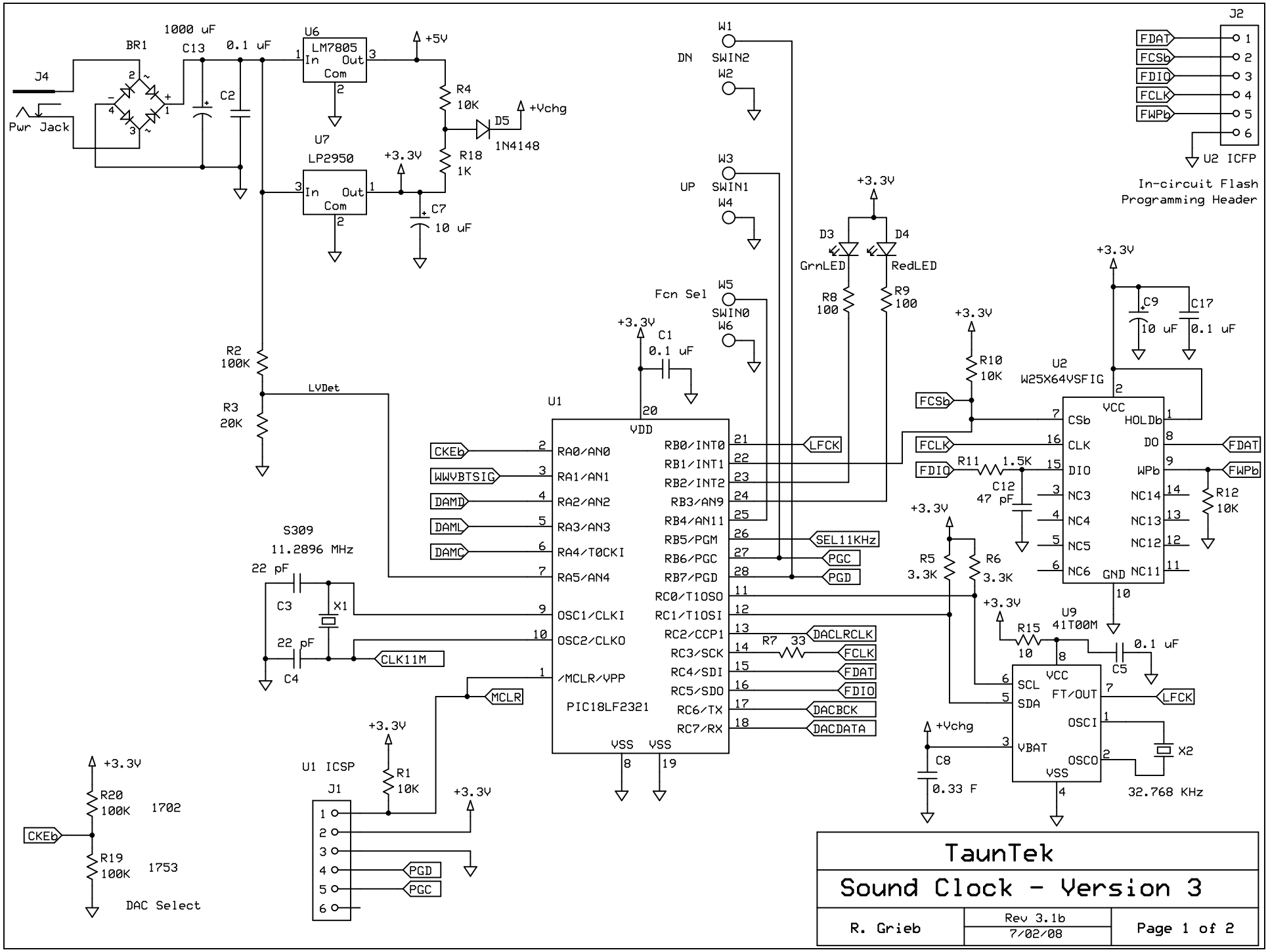
J4
Pwr Jack
BR1
1000 uF
C13
0.1 uF
C2
U6
LM7805
In
Out
Com
+5V
R4
10K
D5
1N4148
+Vchg
U7
LP2950
+3.3V
R18
1K
C7
10 uF
R2
100K
R3
20K
LVDet
W1
DN
SWIN2
W2
W3
UP
SWIN1
W4
W5
Fcn Sel
SWIN0
W6
D3
GrnLED
D4
RedLED
R8
100
R9
100
C1
0.1 uF
U1
VDD
RA0/AN0
RA1/AN1
RA2/AN2
RA3/AN3
RA4/T0CKI
RA5/AN4
OSC1/CLKI
OSC2/CLKO
/MCLR/VPP
PIC18LF2321
VSS
RB0/INT0
RB1/INT1
RB2/INT2
RB3/AN9
RB4/AN11
RB5/PGM
RB6/PGC
RB7/PGD
RC0/T1OSO
RC1/T1OSI
RC2/CCP1
RC3/SCK
RC4/SDI
RC5/SDO
RC6/TX
RC7/RX
CKEb
WWVBTSIG
DAMD
DAML
DAMC
LFCK
SEL11KHz
PGC
PGD
DACLRCLK
FCLK
FDAT
FDIO
DACBCK
DACDATA
R7
33
S309
11.2896 MHz
22 pF
C3
X1
C4
CLK11M
MCLR
U1 ICSP
J1
R1
10K
R20
100K
1702
R19
100K
1753
DAC Select
J2
FDAT
FCSb
FDIO
FCLK
FWPb
U2 ICFP
In-circuit Flash
Programming Header
R10
10K
U2
W25X64VSFIG
VCC
CSb
CLK
DIO
NC3
NC4
NC5
NC6
HOLDb
DO
WPb
NC14
NC13
NC12
NC11
GND
C9
10 uF
C17
0.1 uF
R11
1.5K
C12
47 pF
R12
10K
R5
3.3K
R6
3.3K
U9
41T00M
R15
10
C5
0.1 uF
SCL
SDA
FT/OUT
OSCI
OSCO
VBAT
VSS
X2
32.768 KHz
C8
0.33 F
TaunTek
Sound Clock - Version 3
R. Grieb
Rev 3.1b
7/02/08
Page 1 of 2